Office of the Registrar of Regulations,
Legislative Council,
State of Delaware

DEPARTMENT OF HEALTH AND SOCIAL SERVICES

DIVISION OF SOCIAL SERVICES

Statutory Authority: 31 Delaware Code, Section 512 (31 **Del.C.** §512)

FINAL

ORDER

Delaware's Temporary Assistance for Needy Families (TANF) State Plan Renewal

NATURE OF THE PROCEEDINGS:

Delaware Health and Social Services ("Department") / Division of Social Services (DSS) initiated proceedings to renew Delaware's Temporary Assistance for Needy Families (TANF) State Plan as provided for in the Personal Responsibility and Work Opportunity Reconciliation Act of 1996 (PRWORA), (P.L. 104-193). The Department's proceedings to amend its regulations were initiated pursuant to 29 **Delaware Code** Section 10114 and its authority as prescribed by 31 **Delaware Code** Section 512.

The Department published its notice of proposed regulation changes pursuant to 29 **Delaware Code** Section 10115 in the November 2014 Delaware *Register of Regulations* and 42 United States Code 602(a)(4)(B) requiring written materials and suggestions from the public concerning the proposed regulations to be produced by December 15, 2014 at which time the Department would receive information, factual evidence and public comment to the said proposed changes to the regulations. Additionally, Delaware's TANF State Plan may be viewed on the Division of Social Services' website at: http://www.dhss.delaware.gov/dhss/dss/

NOTICE OF FORTY-FIVE-DAY COMMENT PERIOD FOR DRAFT TANF STATE PLAN

This notice is given to provide information of public interest with respect to Delaware's eligibility status for the Temporary Assistance for Needy Families (TANF) Program, specifically, *the TANF State Plan*. The TANF State Plan describes the manner in which the State administers Delaware's TANF Program, and sets forth the eligibility requirements for TANF-funded programs and services.

Statutory Authority

- Title IV-A of the Social Security Act, Section 402, *Eligible States; State Plan*
- 42 United States Code, Section 602(a), *Eligible States; State Plan*

Title of Notice

Delaware Temporary Assistance for Needy Families (TANF) State Plan

Background

The Personal Responsibility and Work Opportunity Reconciliation Act (PRWORA) of 1996 (Public Law 104-193) provides funding to states through the Temporary Assistance for Needy Families (TANF) block grant. Section 402 of the Social Security Act requires that States periodically submit to the Secretary of the United States Department Health and Human Services a TANF state plan to maintain or renew their status as an "eligible State". In general, the State plan describes the eligibility rules, the populations served, the programs offered, and the State maintenance of effort spending. States also provide certifications that they will maintain other services such as child support enforcement and foster care services. Delaware's TANF State plan is due on December 31, 2014.

Delaware Health and Social Services/Division of Social Services administers the Temporary Assistance for Needy Families block grant program. The TANF program is delivered through a collaborative partnership among Delaware's Department of Health and Social Services (DHSS), Department of Labor (DOL), and the Delaware Economic Development Office (DEDO). The Delaware Transit Corporation (DTC) is also a planning partner.

Summary of Notice of Comment Period for Draft TANF State Plan

In order to continue to receive Federal funding, Delaware must file for renewal of the Temporary Assistance for Needy Families (TANF) block grant with the Department of Health and Human Services (DHHS), Administration for Children and Families (ACF) by December 31, 2014. The State Plan outlines the provisions under which the State will administer the TANF program. The period of this renewal is from October 1, 2014 through December 31, 2016.

Prior to the submission of the plan, 42 United States Code Section 602(a) requires states to provide at least forty-five (45) days for the public to review and comment on the proposed plan and the design of services. The forty-five (45) day

comment period begins on the date this notice is published in the *Delaware Register of Regulations*. Written comments received within the comment period will be reviewed and considered for any subsequent revision of the TANF State Plan.

Developed in accordance with the requirements of PRWORA, the updated State Plan incorporates changes identified through a collaborative process that included development of proposed regulation, distribution of the draft regulation to Delaware stakeholders and the public, review and incorporation of appropriate comments in the plan, and the ongoing review of the TANF program.

A link to the draft TANF State Plan may be accessed at the following Division of Social Services website:

http://www.dhss.delaware.gov/dhss/dss/

SUMMARY OF COMMENTS RECEIVED WITH AGENCY RESPONSE

The Governor's Advisory Council for Exceptional Citizens (GACEC) and the State Council for Persons with Disabilities (SCPD) offered the following observations and recommendations summarized below. The Division of Social Services (DSS) considered each comment and responds as follows.

The Governor's Advisory Council for Exceptional Citizens (GACEC) and the State Council for Persons with Disabilities (SCPD) have reviewed the Department of Health and Social Services/Division of Social Services' (DSS) proposal to renew Delaware's eligibility status for the TANF program covering the period from October 1, 2014 through December 31, 2016. The proposed regulation was published as 18 DE Reg. 354 in the November 1, 2014 issue of the *Register of Regulations*.

GACEC and SCPD endorse the proposed regulation.

Agency Response: DSS thanks the Councils for the endorsement.

FINDINGS OF FACT:

The Department finds that the proposed changes as set forth in the November 2014 *Register of Regulations* should be adopted.

THEREFORE, IT IS ORDERED, that the proposed regulation to renew Delaware's Temporary Assistance for Needy Families (TANF) State Plan for the period October 1, 2014 through December 31, 2016 is adopted and shall be final effective February 10, 2015.

Rita M. Landgraf, Secretary, DHSS

DELAWARE STATE PLAN FOR TANF
Effective October 1, 2014

In fulfillment of the state plan requirements of §402(a) of the Social Security Act, Delaware submits this state plan to renew its status as an eligible state.

This renewal is submitted to the Secretary of the Department of Health and Human Services, through the Director of the Administration for Children and Families.

Delaware's approved amended Work Verification Plan, dated April 20, 2009 describes in detail how TANF work activities are defined, verified, and documented.

The policy changes reflected in this Plan are the result of a process that included development of proposed regulations, distribution of the draft regulations to Delaware stakeholders and the public, and the review and incorporation of appropriate comments in the plan.

Delaware's TANF program requires immediate work activity from caretakers in time-limited families. Those who cannot secure unsubsidized employment immediately are required to participate in other work activities that foster the development of the skills necessary to secure unsubsidized employment and achieve long term self-sufficiency.

Attachment A includes certifications by Governor Jack Markell, Delaware's Chief Executive Officer.

GOALS, RESULTS, AND PUBLIC INVOLVEMENT

Goals

The goal of Delaware's TANF program is to provide a welfare system based on a philosophy of mutual responsibility. In working toward that goal, the State will strive to place individuals in private or public sector unsubsidized employment that enables them to enter and maintain family sustaining employment. To that end, the TANF program provides individualized supports and programming to assist families to become employed, and expects families to accept responsibility to become self-supporting.

Five key principles form the foundation of TANF:

1. Work should pay more than welfare.
2. Welfare recipients must exercise personal responsibility in exchange for benefits.
3. Welfare should be transitional, not a way of life.

4. Both parents are responsible for supporting their children.
5. The formation and maintenance of two-parent families should be encouraged; and teenage pregnancy and unwed motherhood should be discouraged.

Involvement of Local Governments, the Public, and Private Sector Organizations

Welfare Reform in Delaware has a long history of active involvement and partnership between and among state and local governments and the private sector. Delaware has engaged government, the public and the private sector in dialog about the welfare system and ways to enhance it. Since its introduction in January of 1995, in the form of a waiver request, all sectors have had the opportunity to influence Delaware's welfare reform program in a series of public meetings and forums.

A collaborative partnership among the Department of Health and Social Services (DHSS), Department of Labor (DOL), and the Delaware Economic Development Office (DEDO) worked to develop Delaware's TANF program. The Delaware Transit Corporation (DTC) is also a planning partner. The Social Services Advisory Council consisting of educators, health professionals, religious leaders, representatives of community-based organizations, advocates, and government leaders, all appointed by the Governor, continues to provide advice on improving the delivery of Delaware's social programs including TANF.

The requirement for a 45-day public comment period was accomplished by making the plan available for public review and comment through the following means:

- The State Plan was posted for public comment on the Delaware web site at http://www.dhss.delaware.gov/dhss/dss/ during September 2014.
- Stakeholder groups as represented through the Social Services Advisory Council, the TANF Employer Committee, and TANF program contractors were provided with individual copies of the Plan, and asked for feedback.
- The State Plan was published for public comment in the Delaware *Register* during November 2014.

Ensuring Accountability

The Division of Social Services (DSS), a division of State of Delaware Department of Health and Social Services (DHSS), administers TANF. While DHSS is the lead agency, program administration is accomplished through a partnership of DSS, Department of Labor (DOL), Delaware Economic Development Office (DEDO), and the Delaware Transit Corp (DTC).

The Delaware Client Information System and Assist Worker Web (DCIS II/AWW) is a large scale, client/server, interactive eligibility determination and benefit issuance system. DCIS II/AWW automates: client registration, application entry, eligibility determination, benefit calculation, benefit issuance and work programs for more than 100 variations of cash, Medicaid, child care and food benefit programs, administered by the Delaware Division of Social Services. DCIS II/AWW provides automated program support and supports the information needs at the state and local office level. DCIS II/AWW also incorporates program changes required by P.L. 104-193.

Delaware is participating in the Income and Eligibility Verification System (IEVS) required by section 1137 of the Social Security Act.

In addition, the State operates a fraud control program and will disqualify individuals found to have committed an intentional program violation based on findings of administrative disqualification hearings and findings of prosecution or court actions. Delaware has adopted the penalties for intentional program violations used by the Food Supplement Program: 12 months for the first offense and 24 months for a second instance. An individual committing a third offense is permanently disqualified.

TANF Benefits Issued Via Electronic Benefit Transfer (EBT)

Section 4004 of the Middle Class Tax Relief and Job Creation Act of 2012 (P.L. 112-96) requires states receiving TANF grants to “maintain policies and practices as necessary to prevent assistance provided under the State program funded under this part from being used in any electronic benefit transfer transaction in any liquor store; any casino, gambling casino, or gaming establishment; or any retail establishment which provides adult-oriented entertainment in which performers disrobe or perform in an unclothed state for entertainment.” Furthermore, states are required to include in their state plans a statement outlining how they intend to implement policies and procedures to prevent access to assistance through electronic benefit transfer (EBT) transactions in an automated teller machine or point-of-sale device located in casinos, gaming establishments, liquor stores, and retail establishments which provide adult-oriented entertainment. The state plan must also include an explanation of how the state plans to ensure that (1) recipients of the assistance have adequate access to their cash assistance, and (2) recipients of assistance have access to using or withdrawing assistance with minimal fees or charges, including an opportunity to access assistance with no fee or charges, and are provided information on applicable fees and surcharges that apply to electronic fund transactions involving the assistance, and that such information is made publicly available.

Delaware does not issue TANF benefits through Electronic Benefit Transfer (EBT) and therefore has not established

policies or procedures to address EBT access and use as they relate to TANF benefits. If in the future, Delaware begins to distribute benefits through EBT, it will establish policies and procedures that ensure compliance with the Middle Class Tax Relief and Job Creation Act of 2012. Prior to implementation of EBT distribution, these policies and procedures will be detailed in a State plan amendment and in a letter sent to the Secretary.

As noted, Delaware issues TANF benefits via check. Delaware has an agreement with PNC Bank, which has locations throughout the state, to cash the TANF checks of recipients. Recipients cashing their TANF check at a PNC Branch incur no fees for cashing the checks. There are no fees related to electronic fund transfer, since Delaware issues paper checks.

Fugitive Felons, Individuals Convicted of Drug Related Felonies

Fugitive felons and parole violators are ineligible for TANF assistance. In addition, as of August 22, 1996, individuals convicted of drug related felonies are permanently barred from the date of conviction.

Denial of Benefits for Fraudulent Misrepresentation to Obtain Assistance in Two States

Any individual who misrepresents residence to receive TANF, Medicaid, or Food Supplement benefits in two states shall be subject to a ten-year bar if convicted in a state or federal court.

NEEDY FAMILIES

Definition of Needy Families

For cash assistance program purposes, needy families are a child and or children living in the home of a parent, guardian, custodian, or specified relative whose combined income and financial resources are less than the standards established by the State.

The following sections describe these standards and how they are applied to applicants and recipients.

Income and Resource Rules for Determining Need

For purposes of determining need Delaware will continue to utilize the established income and resource rules of the TANF program. The following specific features of Delaware's TANF program continue to apply:

- The equity value of real and personal property owned by a family budget group cannot exceed $10,000.00.
- The values of automobiles owned by members of a TANF household are disregarded. An automobile is defined as any motorized vehicle used for transportation via public roadways or to produce income.
- The cash value of a life insurance policy is excluded.
- In addition to the current resource limit, families are allowed to establish special Education and Business Investment Accounts (EBIA) of up to $5,000.00, including interest.
  - Families will contribute directly to their EBIAs.
    Funds in such accounts will not be considered as a resource. Withdrawals from such accounts must be for approved purposes, as defined in TANF. If funds are withdrawn for non-approved purposes, the money will be counted as a resource in the month received. Approved reasons for withdrawal of funds for self-sufficiency needs include, but are not limited to: dependent care expenses, security deposit for an apartment or house, or vehicle repair costs.
- Financial assistance received from school grants, scholarships, vocational rehabilitation payments, JTPA payments, educational loans, and other loans that are expected to be repaid will not be counted as income for TANF program purposes. Also, other financial assistance received that is intended for books, tuition, or other self-sufficiency expenses will be excluded.
- Earnings of dependent children, regardless of student status, will be disregarded in determining the family's eligibility and the amount of TANF benefits.
- A one-time bonus payment of $50.00 will be paid from TANF funds to eligible teens who graduate from high school by age 19. This bonus, which will be paid directly to the high school graduate, will be disregarded as income.

Income Tests to Determine Eligibility

There are two income tests to determine financial eligibility. The first test is a gross income test, and the second is a net income test.

- Gross income test. Compares the family's income to 185% of the applicable standard of need. Both applicants and recipients must pass this income test.
- Net income test. Compares a family's income, after applying certain disregards, to the applicable standard.
- For applicants, defined as families who have not received assistance in at least one of the four months immediately preceding the application, the net income is compared to the payment standard.
- For recipients, defined as families who have received assistance in at least one of the four months preceding the application or are current recipients, the net income is compared to the standard of need.
- A family's income must be less than the gross and net income limits to be financially eligible for TANF. Once eligibility is established, the grant amount is determined.

- Gross income is the total of the earned and unearned income.
- Wages and self-employment income are examples of earned income.
- Social Security benefits, child support, and stepparent income are examples of unearned income. Stepparent income will be included if the child's natural parent lives in the home.

Exhibit 1 contains the calculation steps for TANF applicants.

Exhibit 1: Determining Applicant Eligibility for TANF Benefits

Step 1) The gross income is compared to 185% of the applicable TANF standard of need. Assistance is denied if the income exceeds 185% of the applicable TANF standard of need.

Step 2) The standard work deduction ($90.00) and childcare expenses are subtracted from each wage earner's earnings. The applicant's net earned income is added to unearned income to determine the net family income. The net income is compared to the payment standard. Assistance is denied if the income exceeds the payment standard.

If the income is less than the payment standard,

Step 3) The standard work deduction ($90.00), childcare, and the $30 plus 1/3 disregard (if applicable) are subtracted from each earner's earned income. This net earned income is added to the unearned income to calculate the family's net income. The net income is subtracted from the applicable standard of need to obtain the deficit. The deficit is multiplied by 50%; the number calculated is the remainder. The grant is either the remainder or the payment standard, whichever is less.

Exhibit 2 provides the calculations for TANF recipients.

Exhibit 2: Determining Recipient Eligibility for TANF Benefits

Step 1) The gross income is compared to 185% of the applicable TANF standard of need. Assistance is denied if the income exceeds 185% of the applicable TANF standard of need.

Step 2) The standard work deduction ($90.00), childcare, and the $30 plus 1/3 disregard (if applicable) are subtracted from each earner's earned income. The net earned income is added to unearned income to calculate the family's net income. Assistance is denied if the income exceeds the standard of need.

If the income is less than the standard of need,

Step 3) The net income is subtracted from the applicable standard of need; the number calculated is the deficit. The deficit is multiplied by 50%; the number calculated is the remainder. The grant is either the remainder or the payment standard, whichever is less.

The TANF standards apply to all benefits and services provided to needy families except for those listed below, for which Delaware has established separate need standards.

- Emergency Assistance, discussed in the section on Diversion Assistance Program and Attachment A
- Services for Working Families in Financial Crisis described in the additional targeted support section
- Child care, described in the Involvement of Local Governments, the Public, and Private Sector Organizations section, the Eligibility for Assistance under the TANF Program section, and the Supportive Services section
- Child Welfare Services

Fill-the-Gap Budgeting

Fill the Gap budgeting will be used for recipient families to determine continued eligibility and the amount of TANF benefits so that families can retain more of their income. By having a standard of need which is greater than the payment standard a "gap" is created. The difference between the family's income and the need standard is called the deficit. The state pays a percentage of the deficit up to a maximum benefit level or payment standard.

- Three standards will be used in financial eligibility calculations: 185% of the standard of need, the need standard and the payment standard. 185% of the standard of need will be used in the gross income test.
- The standard of need used is 75% of the Federal Poverty level. This includes allowances for food, clothes, utilities, personal items, and household supplies.

Diversion Assistance Program

Delaware operates a Diversion Assistance program intended to help a family through a financial problem which jeopardizes employment and which, if not solved, could result in the family needing regular ongoing assistance. The Diversion Assistance payment will not exceed $1,500 or the financial need resulting from the crisis, whichever is less. Diversion Assistance, which is available to both applicant and recipient families, is not a supplement to regular assistance but is in place of it.

Eligibility requirements for Diversion Assistance are as follows:

- The parent must be living with his/her natural or adopted children.
- The family has not received a Diversion Assistance payment in the past 12 months.
- The Diversion Assistance amount will alleviate the crisis.

- The parent is currently employed but having a problem which jeopardizes the employment or has been promised a job but needs help in order to accept the job.
- The family's income would qualify the family for TANF as a recipient household. (When calculating eligibility for Diversion Assistance the family is given the $30 plus 1/3 disregard, if applicable, and the family's net income is compared to the Standard of Need.).
- The family's resources would qualify for TANF.

The Diversion Assistance payment may be used for items and/or services, such as but not limited to:

- Transportation (such as vehicle repairs, tires, insurance, driver's license fee, gas).
- Clothing such as uniforms or other specialized clothing and footwear or other employment-related apparel.
- Tools and equipment.
- Medical expenses not covered by Medicaid (e.g., eye glasses).
- Union dues, special fees, licenses or certificates.
- Up-front costs of employment such as agency fees and testing fees.
- Unpaid childcare expenses which, if they remain unpaid, preclude the provision of future child care.
- Relocation expenses for verified employment in another county or state. These expenses may include moving equipment rental, gas, and lodging for the days of the move and the first month's rent, rental and utility deposit.

Diversion Assistance payments will be made to a third party vendor, not the parent. When the parent receives Diversion Assistance (s)he agrees to forego TANF cash assistance as follows:

- $0 through $500.99 for 1 month.
- $501 through $1,000.99 for 2 months.
- $1,001 through $1,500 for 3 months.

The once a year limitation on Diversion Assistance and the period of ineligibility can be eliminated when good cause exists. Good cause exists when circumstances beyond the client's control make re-application for Diversion Assistance or TANF necessary. Examples of good cause are the employer lays off the parent or a serious illness forces the parent to stop working.

The family is eligible for TANF related Medicaid in the month in which the Diversion Assistance payment is made. The family would remain eligible for Section 1931 Medicaid (TANF related Medicaid) until the family's income exceeds the standard of need. If the family's income exceeds the standard of need because of increased earnings or loss of the $30 plus 1/3 disregard and the parent is working, the family may be eligible for Transitional Medicaid.

Diversion Assistance does not count as income in the childcare program. Families receiving Diversion Assistance may also be eligible to receive childcare under Delaware's working poor childcare program if their income does not exceed 200 percent of the federal poverty level. Receipt of Diversion Assistance would not bar receipt of Food Supplement benefits, and food benefit applications will be actively solicited from individuals requesting Diversion Assistance.

Diversion Assistance does not count against the time limit on receipt of assistance.

The family will not have to assign child support to the state. Child support received by the parent or the Division of Child Support Enforcement (DCSE) will belong to the family. DCSE will not use child support to offset or reimburse the Diversion Assistance.

Diversion Assistance is not intended to replace TANF's Emergency Assistance Program or Supportive Services payments, which will continue. The TANF Emergency Assistance Program provides identical benefits that were provided under Delaware's State Plan in effect on August 21, 1996. (See Attachment B) Rather, Diversion Assistance expands the opportunities to access services to support employment.

Child Welfare Services to assist needy families in maintaining children in the home of their parent(s) or a relative caregiver

These services are provided when conditions exist requiring the intervention of the Division of Family Services (DFS). Services or payment for services for the child or family is provided to deal with the conditions that caused the need for the services and the child or family is not eligible for such services under Title IV-E. The services provided are those identified by DFS as needed to meet the needs of the child. These include investigation, case management, community and home based intervention services, foster care maintenance payments for short-term placement of less than 180 days outside of the home as well as foster care payments for temporary absence placements of up to 365 days (see below). Also included are case management services for preventive services, court-related activities, and foster care. Needy families whose combined earned and unearned income is at or below 900% of the federal poverty level during the year services are provided are eligible to receive these TANF or MOE funded services.

As described on page one of Attachment B, Federal funds may be used under the former Emergency Assistance provision (attached) that was in effect on August 21, 1996. In addition, paragraph two describes how State MOE funds may be used to pay for these benefits and services while the child remains in the home of a relative or during a period of temporary absence from the home of up to 12 months, as long as the child is expected to return home during that period of time or a good cause extension has been granted.

ELIGIBILITY FOR ASSISTANCE UNDER THE TANF PROGRAM

Conditions of Eligibility

If the income tests described above are met, a family is eligible to receive TANF assistance subject to the following conditions.

Relationship/Living Arrangements

Children must be living in the home of a parent, guardian, custodian, adult acting in loco parentis or a specified relative.

During 2013, the Delaware legislature passed the Civil Marriage Equality and Religious Freedom Act of 2013. The law was effective July 1, 2013. The TANF program affords partners in a same gender marriage the same program rights, benefits, responsibilities, obligations, and duties as afforded different gendered married partners. Married partners of the same gender are treated in the same manner as different gendered married partners for all components of the TANF program including but not limited to technical eligibility, child support cooperation, financial eligibility, case composition, grant determination, and work requirements

The caretaker of a teen parent who is not a parent must demonstrate valid circumstances why the teen is not living with a parent and must agree to be a party to the Contract of Mutual Responsibility and fulfill the same responsibilities as a parent.

Tribes

Delaware has no federally recognized tribes.

Individuals from Another State

All families meeting the status eligibility requirements set forth above are eligible for TANF benefits using Delaware rules, regardless of how long they have been residents of the State.

Family Cap Provision

No additional cash benefits will be issued due to the birth of a child, if the birth occurs more than ten (10) calendar months after the date of application for benefits under TANF. Children born to teen parent included in TANF grants are also subject to the family capped rules.

The family cap will not apply to:

- An additional child who was conceived as a result of incest or sexual assault.
- Children who do not reside with their parents.
- Children born prior to the period identified above who return or enter the household.
- A child that was conceived in a month the assistance unit (i.e., the entire family) was not receiving TANF, but this does not apply in cases that close due to being sanctioned.

The additional child(ren) is included in the standard of need for purposes of determining eligibility. The income and resources of the child, including child support, is included in determining the family's income and resources. However, the child(ren) is not included in determining the payment standard for the family.

- The additional child(ren) is considered a recipient for all other purposes, including categorical Medicaid coverage, TANF child care, and Food Supplement benefits.
- Child support received for capped children is passed directly through to the family.

Denial of Benefits to Babies Born To and Residing with Unmarried Teen Parents

Cash assistance is not provided to babies born on and after January 1, 1999 to unmarried minor teens. This applies to both applicants and recipients. For all other purposes, these babies will be considered TANF recipients. They may also be eligible to receive food benefits, Medicaid and child care as well as vouchers for the baby's needs. This provision applies as long as the teen parent resides in the home with the baby, is unmarried or less than eighteen (18) years of age.

Treatment of Eligible Non-Citizens

Qualified non-citizens who enter the United States before August 22, 1996 are eligible to receive the same benefits and services and are subject to the same conditions and requirements as all other applicants and recipients.

Qualified aliens entering the United States on or after August 22, 1996, who are exempt from benefit restrictions as specified in Federal law, are eligible to receive the same benefits and services and are subject to the same conditions and requirements as all other applicants and recipients.

Qualified non-citizens who enter the United States on or after August 22, 1996 are, after five years, eligible to receive the same benefits and services and are subject to the same conditions and requirements as all other applicants and recipients.

Statewideness

All definitions and determinations of need are applied on a statewide basis.

Program Type

Depending on circumstances, families are placed in either the Time-Limited TANF program or the Non Time-limited TANF program.

Delaware's Time-Limited TANF Program has an employment focus. Participants are expected to meet immediate work requirements in order to receive benefits.

Delaware uses State non-maintenance of effort funds to provide benefits to recipients in a solely state funded two-parent program.

TANF eligible families that include a parent or head of household who has presented approved documentation that they are unable to work because of a medical disability will be enrolled in the non-time limited program. These clients may receive benefits through either a solely state funded program or the TANF program. Delaware will use State non-maintenance of effort funds to provide benefits to recipients in the solely state funded medical disability program.

Time-limits for Delaware's Time-Limited TANF Program and the interactions between time-limits and work requirements are described in the sections entitled, Work: Time Limits and Work, and TANF Benefits to Needy Families: Time Limits.

Families with the following status will receive benefits in the Non Time-limited program:

- Families that the agency has determined are unemployable, either because a parent is too physically or mentally disabled to work in an unsubsidized work setting or because the parent is needed in the home to care for a child or a spouse who is disabled.
- Families headed by a non-needy, non-parent caretaker.
- Families headed by a non-citizen parent who is not eligible to receive TANF benefits.
- Families where the agency has determined that the adult caretaker is temporarily unemployable.
- Families in which the adult files a claim or has a claim being adjudicated for SSI or disability insurance under OASDI. In this case, the family must sign an agreement to repay cash benefits received under the Non Time-limited TANF program from their SSI/DI benefits

Contract of Mutual Responsibility requirements and sanctions for noncompliance apply to families in the Non Time-limited TANF program. Delaware will provide benefits utilizing solely state funding (SSF) to families that include a head of household or a spouse of a head of household who have exceeded 60 cumulative months of federally funded TANF assistance and represent more than 20 percent of the TANF caseload.

Time Limits

Under TANF, cash benefits are time-limited for households headed by employable adults age 18 or older who are included in the grant. Prior to January 1, 2000, Delaware limited receipt of TANF, for families in the Time-Limited Program, to forty-eight (48) cumulative months. During the time-limited period, employable adults received full benefits if they met the requirements of their Contract of Mutual Responsibility, including employment-related activities.

Effective January 1, 2000 the time limit for receipt of TANF cash benefits is thirty-six (36) cumulative months.

During the time-limited period, employable adult recipients receive full cash benefits only as long as they meet the requirements of their Contract of Mutual Responsibility, including participation in employment-related activities detailed in their ISS. The ultimate goal of this time-limited period is to support the employable adult's search for, and placement in, an unsubsidized job.

Individuals found eligible for TANF prior to January 1, 2000 will still have a forty-eight (48) month time limit even if they reapply for benefits on or after January 1, 2000.

DSS will track the time remaining before a family's time limits expire and notify families on a quarterly basis of the time they have remaining before the time limits expire. At least two (2) months prior to the end of the 36 or 48 cumulative months in which a family has received assistance, DSS will remind the family that assistance will end and notify the family of the right to apply for an extension.

Extensions are provided only to those families who can demonstrate that:

- the agency substantially failed to provide the services specified in the individual's Contract of Mutual Responsibility; the related extension will correspond to the time period for which services were not provided; or
- despite their best efforts to find and keep employment, no suitable unsubsidized employment was available in the local economy to the employable adult caretaker; the maximum extension under such circumstances will be 12 months.

Extensions may also be granted where other unique circumstances exist. Extensions will not be granted if the adult caretaker received and rejected offers of employment, quit a job without good cause, was fired for cause, or if the adult caretaker did not make a good faith effort to comply with the terms of the Contract of Mutual Responsibility and the ISS.

After the time limit has been reached, benefits will be provided to families that have been granted an extension only for a maximum period of 12 months. Thus, for Time-Limited families the maximum period for receipt of benefits to families enrolled in the Time-Limited TANF Program will be 60 cumulative months for families with a cumulative 48 month time limit and 48 months for families with a 36 month time limit. Delaware will comply with federal regulations regarding families receiving assistance in excess of 60 months of TANF paid through the federal TANF block grant.

CONTRACT OF MUTUAL RESPONSIBILITY/INDIVIDUAL SERVICE STRATEGY

The caretaker of children in the TANF program enters into a Contract of Mutual Responsibility with the Division of Social Services (DSS). Applicants and recipients have a face-to-face interview. During this interview, the DSS worker explains the Contract of Mutual Responsibility (CMR) and those elements specific to the client.

The CMR lists the responsibilities of the family and the supports the State will provide. The family's responsibilities include, but are not limited to: employment-related activities, school attendance and immunization requirements for children, family planning, parenting education classes, and substance abuse treatment requirements. The State provides supports to families including but not limited to: employment-related activities, training activities, child care, Medicaid, and other services identified during the development of the CMR by DSS workers and the Individual Services Strategy (ISS) developed by Employment Connections (EC) and Keep a Job (KAJ) contractors providing self-sufficiency services to work mandatory clients.

The CMR is designed to be individualized to the specific needs and situation of each family. Therefore, the exact requirements within the Contract may vary from family to family. This document can be revised as the needs and the situation of the family evolve.

Services related to these CMR requirements will be available to the participant. If the services specified in the CMR are not reasonably available to the individual, the participant will not be sanctioned for failure to comply and the CMR will be modified to reflect that the service is currently unavailable.

It is mandatory that all caretakers enter into a CMR. Contracts are completed for families in the Time Limited TANF program and the Non Time-limited TANF program as well as for teen parents. Both caretakers in an assistance unit and non-needy caretaker payees are required to develop and comply with CMRs. Other family members within the assistance unit may be required to comply with provisions of the Contract, and are subject to sanction for non-compliance.

If the caretaker is a non-needy caretaker, the individual would not be required to participate in employment-related activities but will be required to participate in other Contract activities.

If a caretaker objects to certain aspects of the CMR, the caretaker needs to present these objections up front, at the time of the initial CMR. If good cause can be demonstrated, the CMR can be amended to rectify the objections.

When staff has reason to believe that the family needs other services to become employed or to increase work hours and wages, these services will be identified and specified in the CMR. Needed services will also be identified on the caretaker's ISS developed by EC and KAJ contractors.

The fiscal sanction for not cooperating, without good cause, in development of the CMR will be an initial $50.00 reduction in benefits. This reduction will increase each month by $50.00, either until there is compliance or the case is closed. The sanction will end with demonstrated compliance. Sanctions for failure to participate in CMR and ISS activities are described in subsequent sections.

Sanctions: Failure to Comply with the Contract and the Imposition of Sanctions

The Contract of Mutual Responsibility encompasses three broad categories of requirements: 1) enhanced family functioning; 2) self-sufficiency; and 3) teen responsibility requirements. In addition, caretakers required to participate in work activities create an Individual Service Strategy (ISS) with their employment and training program that details their expected weekly work activities.

1. Enhanced family functioning requirements of the CMR include, but are not limited to, acquiring family planning information, attending parenting education sessions, ensuring that children are immunized, and cooperation with specialized programming designed to assist parents with documented disabilities that impede or prevent employment. Sanction for non-compliance with these requirements is an initial $50, which will increase by $50 every month until there is compliance with the requirement. The initial $50 reduction is imposed whether the family fails to comply with one, or more than one requirement. Clients must to comply with all requirements before the sanction can end.
2. Self-sufficiency requirements of the Contract of Mutual Responsibility are employment and training, work-related activities, and ensuring school attendance requirements for dependent children under age 16.
   - 2.1 The sanction for non-compliance with work-related activity requirements is, subject to adequate and timely notice, closure of the case due to imposition of an immediate full-family sanction.
   - 2.2 Recipients, whose cases closed for failure to participate, must participate in work related activities for four consecutive weeks at the required hours per week for their case to be re-opened. Payments are not retroactive.
   - 2.3 Households that have received a full family sanction must lose at least one month of cash assistance prior to the sanction being lifted.
   - 2.4 The penalty for individuals who quit their jobs without good cause is an immediate full family sanction. The sanction will last at least one month. Recipients must participate in work related activities for four consecutive weeks at the required number of hours per week for their grant to be re-opened. Payments are not retroactive.
   - 2.5 For dependent children under the age of 16 if the child does not maintain satisfactory attendance an initial $50 sanction is imposed. The sanction will increase by $50 every month until there is compliance. The

sanction is not imposed if the parent of the child is working with school officials or other agencies to remediate the situation.

3. Teen responsibility requirements for dependent teens 16 and older include maintaining satisfactory school attendance, or participation in alternative activities such as training or employment. The sanction for non-compliance with these requirements is the removal of the teen from the TANF grant. The teen is removed from the TANF grant for at least one month. To cure the sanction the teen must participate in employment and training activities under the supervision of an Employment Connections program for four consecutive weeks, return to school, or work full time.

Failing to comply with both the enhanced family functioning and self-sufficiency requirements will result in combined penalties. For example, both a $50 reduction and a full family sanction could be assessed for failures to comply in two areas. Demonstrated compliance will not excuse penalties for the period of noncompliance. Sanctions will be imposed for the full period of noncompliance.

WORK

Goals for Work

Delaware's TANF program is based on the belief that assistance provided is transitional and should not become a way of life. The State maintains that the way for persons to avoid dependency on welfare is for them to find and maintain employment. Thus the primary goal of TANF is to help recipients find private sector work and to help them keep such work by providing them with necessary supports.

To assist families in obtaining and maintaining employment, the State will engage the efforts of the Departments of Health and Social Services, Labor, and Economic Development and Delaware's private sector to provide job readiness and placement opportunities, health and child care, and family services. In turn, TANF recipients who have the capacity to work will be required to accept work, to keep their children in school, to cooperate with child support, to bear the costs of additional children they conceive while on welfare, and to leave the welfare rolls after a defined time period.

State Agencies Involved

Delaware Health and Social Services, Labor, and Economic Development have a unique partnership. All three agencies are responsible for moving welfare clients to work. These three agencies have collaborated in developing Delaware's TANF program, in public information, in implementation, and continue to collaborate in managing the initiative.

The Delaware Transit Corporation (DTC) in the Department of Transportation has joined the TANF collaborative team, and has assisted to develop a statewide transportation system plan for TANF, using vans and other vehicle sources.

Involvement of Community, Education, Business, Religious, Local Government and Non-Profit Organizations to Provide Work

As noted in the discussion on page 2, every sector has been actively involved in the development of Delaware's TANF program and continues to be involved.

A TANF Employer Committee, consisting of representatives of both the public and private sector, assists in placing welfare recipients in unsubsidized jobs and provides advice on direction, policy, and implementation of welfare-to-work efforts. This committee was established through HB 251.

To further promote employer interest in hiring TANF recipients, the Departments of Labor and Economic Development meet with members of the business community at regularly scheduled events like monthly Chamber of Commerce meetings and at special events.

The Social Services Advisory Council was established by executive order. The Governor appoints council members to advise the directors of both the Division of Social Services and the Division of Child Support Enforcement on matters related to public assistance and child support services. Council members represent the community, advocates, non-profit providers, educators, and interested citizens.

DSS and DCSE management regularly meet with the Social Services Advisory Council to discuss TANF and other Social Services and Child Support programs.

Role of Public and Private Contractors in Delivery of Services

Delaware has contracted with private for-profit and non-profit providers and the local community college network to provide job readiness, job placement, and retention services to welfare clients since 1986. These contractual arrangements continue under TANF. Contractors include community and faith-based social services agencies and organizations offering specialized services.

A number of community providers across the state provide academic remediation to TANF recipients.

Who Must Participate

All adult caretakers and other adults in the time-limited assistance unit who are not exempt must participate in TANF employment and training related activities. The three exemptions are: 1) a single custodial parent caring for a child under

12 months of age; 2) an individual determined unemployable by a health care professional; and 3) a parent caring for his or her child or spouse who is disabled.

Services to Move Families to Work

Delaware's goal is to place the adult recipient in unsubsidized employment as quickly as possible. To accomplish this goal, the current menu of potential services includes all the federally acceptable categories of work activities, as shown below. In addition, Delaware offers ongoing case management, work retention, and job enhancement services provided by our Employment Connections (EC) and Keep-A-Job (KAJ) contractors:

- Unsubsidized employment
- Subsidized private sector employment
- Subsidized public sector employment
- On-the-job training
- Job search and job readiness assistance
- Work experience
- Community service programs
- Vocational educational training
- Child care for an individual participating in a community service program
- Job Skills training directly related to employment
- Education directly related to employment for recipients who have not completed secondary school or received a GED
- Satisfactory attendance at secondary school or in a GED program for recipients who have not completed secondary school or received a GED.

Non-exempt TANF participants will participate in the job search program, consisting of job readiness classes and supervised job search activity. Unsuccessful job search participants can be placed in another job search sequence or another work-related activity such as work experience, community service, OJT, or a skills training program.

Clients must keep appointments with the Employment and Training programs, cooperate in the development of the employment activities included in their Contract of Mutual Responsibility and Individual Service Strategy (ISS), and participate in employment and training activities. Individuals who are not in compliance with any of the above client responsibilities will be subject to sanctions as described in "Sanctions: Failure to Comply with the Contract and Imposition of Sanctions" described in a subsequent section of the State Plan.

The State implemented an Employment and Training Management Information System (ETMIS) in July 2005. ETMIS was incorporated into the existing Delaware Client Information System (DCIS). The ETMIS tracks referrals to employment and training programs, hours of participation, work activities, and sanctions. The ETMIS enhances contractor and participant accountability. Additionally it is a valuable tool for the collection and dissemination of statewide program data used for determining program effectiveness and making program design changes. The system is being updated to a web-based system in 2015.

Employment and Training Hours and Work Activities

Families are required to participate in a minimum number of hours of approved employment and training activities each week. The chart below specifies the number of hours required each week by family type. For families with work mandatory individuals, participation in either employment or other activities related to finding work for at least their required hours a week for two consecutive weeks is a condition of eligibility for TANF benefits. Once this condition and other eligibility requirements are met, benefits are retroactive to the first day of the two-week up-front participation period.

Family Type	Required Employment and Training Hours Per Week
One Parent Home	30
One Parent Home with Child(ren) under 6 years old	20
Two Parent Home	40

Job search and structured job readiness activities continue for another two weeks for individuals who do not find unsubsidized employment for at least the required hours. Individuals who do not find employment within the first four weeks of job search are assigned to work experience activities, and/or other employment and training activities.

Single parent households that are participating in work experience are required to participate up to 30 (or 20) hours per week. Work experience hours are determined by dividing TANF and Food Supplement benefits by the Delaware minimum

wage. If the hours determined by dividing the grants by the minimum wage exceed 30 hours per week, participants are to complete no more than 30 participation hours. If the maximum allowable hours are less than 30 hours per week, participants are to complete the FLSA allowed number of work experience hours, but must make up the difference needed to meet their hours of participation requirement with other countable activities.

Two-parent families assigned to work experience must engage in up to 40 hours per week, determined by dividing TANF and Food Supplement benefits by the Delaware minimum wage. If the hours determined by dividing the grants by the minimum wage exceed 40 hours per week, participants are to complete no more than 40 participation hours. If the maximum allowable hours are less than 40 hours per week, participants are to complete the FLSA allowed number of work experience hours, but must make up the difference needed to meet the 40 hour participation requirement with other countable activities.

An individual in a one-parent household enrolled in the TANF Time-Limited Program who, in accordance with the requirements in their Contract of Mutual Responsibility and ISS, participates in unsubsidized employment of at least 30 hours per week is not required to participate in other work-related activities. Two-parent families who, in accordance with the requirements in their Contract of Mutual Responsibility and ISS, participate in unsubsidized employment of at least 40 hours per week are not required to participate in other work-related activities. All families who are meeting their required hours through unsubsidized employment are required to continue providing their employment and training program with verification of their employment.

Delaware law expands the opportunity for TANF recipients to engage in educational activities beyond the federal limits of countable hours for State participation rate purposes. To take advantage of this state regulation individuals participating full-time in educational activities, based on the standards established by the institution, must participate in additional work-related activities, to equal twenty (20) actual participation hours. For most recipients their remaining non-core hours are met through homework time. Homework time for federal participation rate purposes is not to exceed the rate of 1 hour of unsupervised homework time per credit hour or class hour if the educational program requires homework.

Recognizing that Delaware's hourly requirements for participation in work and work-related activities are broader than those prescribed by the current TANF legislation, Delaware may provide some benefits through a solely state funded (SSF) program.

Time limits for Delaware's Time-Limited TANF Program are described in the section entitled, Time Limits (page 13).

Eldercare Workforce Development

Delaware does not intend at this time to assist individuals to train for, seek, and maintain employment in the following specific activities:

I. Providing direct care in a long-term care facility (as such terms are defined in §2011 of the Social Security Act; or
II. In other occupations related to elder care determined appropriate by the State for which the State identifies an unmet need for service personnel.

Protecting Current Workers from Displacement

DSS conforms to Section (a)(5) of the Federal Unemployment Tax Act which requires that a job offered cannot be available as a result of a strike or labor dispute, that the job cannot require the employee to join or prohibit the employee from joining a labor organization, and that program participants are not used to displace regular workers.

In addition, DSS ensures that no participants, including but not limited to those placed in a work experience placement, displace regular paid employees of any of the organizations providing the work experience placement. Such assurance complies with State law contained in 31 Delaware Code, Chapter 9, Section 905(b). This assurance also complies with Section 407(f) of the Personal Responsibility and Work Opportunity Reconciliation Act of 1996 (PRWORA**),** which requires that DSS will not use federal funds under TANF to place individuals in a work activity when:

- Any individual is on a layoff from the same or an equivalent job.
- The employer has terminated any regular employee or otherwise caused an involuntary reduction of its workforce in order to fill the vacancy created with an adult receiving TANF benefits.

In addition, DSS has established a grievance procedure, in conformance with Section 407(f)(3) of PRWORA, for resolving complaints for any alleged violation of nondisplacement requirements. Employees or their representatives who believe that their jobs are being displaced or infringed upon shall present their complaint to the employment contractor with authority over the placement. If the contractor is unable to resolve the problem within 15 days, the employee or representative may file a formal grievance in writing to the DSS Director's Office, who will hear a formal grievance. The employee will have an opportunity to: present his/her grievance on the record; present evidence; bring witnesses and cross-examine witnesses; be represented by counsel; and receive a written decision.

Grievance hearings will be scheduled within 30 calendar days of receipt of the formal grievance, and a written decision will be issued within 30 days of the hearing. If either party is dissatisfied with the State's written decision, they may appeal the decision to the U.S. Department of Labor within 20 days of receipt of the written decision. The procedures for appeal, which must be sent to the Office of Administrative Law Judges, in the U.S. Department of Labor, will be provided in writing

with the decision.

PARENTAL RESPONSIBILITY

Adults and minor parent(s) are required to comply with parenting expectations outlined in the Contract of Mutual Responsibility.

Cooperation with The Division of Child Support Enforcement (DCSE)

Participants in TANF must cooperate with the Division of Child Support Enforcement (DCSE) as a condition of eligibility. In addition, all families are required to provide sufficient information to permit Delaware to obtain child support on behalf of the family. Exceptions can be made when the caretaker demonstrates that pursuit of child support would create a danger to the caretaker or the child(ren). It is the responsibility of the client to provide documentation to verify such a good cause claim.

Failure of a caretaker, without good cause, to cooperate with and provide information to the DCSE to permit the State to pursue the collection of child support on behalf of dependent children will result in a full family sanction, until compliance. Applicants who fail to provide information so that Delaware may pursue child support collections will be denied or closed. To cure the child support sanction, the caretaker will provide sufficient information to permit Delaware to pursue child support collections on behalf of the needy children in the family.

When a child lives with both the natural father and the mother but paternity has not been legally established, the parents will be referred to the DCSE for a voluntary acknowledgment of paternity.

When a child lives with the natural father but paternity has not been legally established, the father will complete a declaration of natural relationship document and will provide acceptable verification of relationship.

When a child lives with a relative of the natural father but paternity has not been legally established, the relative must complete a declaration of natural relationship document and provide acceptable verification of relationship.

In Delaware, DCSE determines non-cooperation with child support requirements. In addition, effective January 1, 1999 DCSE began making the determination of good faith efforts to comply.

Distribution of Child Support Collections to TANF Recipients

Delaware is a fill-the-gap state in 1975, uses fill-the-gap to make sure that families do not experience a net loss of income due to the State retaining Child Support paid by absent parents.

SUPPORTIVE SERVICES

Supportive services, such as child care, and TANF provided assistance with other work-related expenses, such as eye examinations and corrective lenses, dental, and physicals not covered by Medicaid, transportation, fees, training, and work-related equipment, uniforms, shoes, and supplies will be available where possible. Services are provided by voucher or directly. In addition, TANF will, on a case-by-case basis, pay fees to purchase certificates, licenses, or testing needed to obtain employment. Medical services are not part of these supportive services. DSS will determine when such services are necessary for a TANF recipient to participate. The services shall include:

- Support provided by contractors to retain employment for up to one (1) year.
- Health care for Delaware citizens
- To help individuals retain unsubsidized employment Delaware provides subsidized child-care to low income working families until the family's income exceeds 200 percent of the federal poverty level.
- Job search programs and other assistance from the Department of Labor to find a job.
- Ongoing job retention assistance.
- Delaware recognizes the importance of child care in helping recipients participate in work-related activities, and securing and retaining unsubsidized employment. To that end, the financial resources provided for childcare have been significantly increased from the FY95 childcare funding level.

Assessment of Barriers related to Mental Health, Substance Use, and Domestic Violence

A standardized screening tool is used by Delaware to identify possible issues related to mental health, substance abuse, and domestic violence. Participants who complete the screening answer questions designed to reveal potential problems related to domestic violence, depression, mania, anxiety, substance use, PTSD, and thoughts of self-harm.

Screening occurs during the TANF intake and at redetermination. Additional screening occurs once a client begins participating with the employment and training programs. This process of multiple screenings allows clients the opportunity to reveal difficulties at the time and place they are most ready to do so.

DSS workers report that the screening frequently reveals significant domestic issues that participants need to resolve. By utilizing the screening, workers are able to refer participants for assistance. Further efforts to assist individuals to resolve domestic violence and other abuse situations are described in a later section: Parental Responsibility: Addressing Problems of Statutory Rape and Domestic Violence.

Addressing Barriers Related to Parental Mental Health and Substance Abuse Problems

The Bridge Program

The Bridge Program assists clients suspected of having problems related to substance abuse, mental health, or domestic violence through screening, assessment, and case management services. The primary role of the Bridge program is to assist clients in accessing appropriate treatment services. The Bridge provider develops a plan with each client that identifies the needed services and develops strategies to ensure compliance with treatment recommendations. The bridge provider may transport clients to appointments and will coordinate with the employment and training vendors to ensure that the client receives credit for their participation in treatment. In their role as case managers and client advocates the Bridge vendor will often assist clients who are facing homelessness or other emergency events resolve these situations.

All adult TANF recipients suspected of having problems related to substance abuse and/or mental health are referred to the Bridge Program. Additionally, Bridge screens all adults for problems related to substance abuse, mental health, and domestic violence as a routine process for adults entering the employment and training programs. A contracted vendor provides the services offered by the Bridge Program. The Bridge vendor is contracted through the Division of Substance Abuse and Mental Health who has collaborated with DSS to provide the Bridge services. The program was modified in 2008 to make the program more accessible to TANF recipients by locating the Bridge services at the Employment Connections sites. The goal of co-locating the Bridge and Employment Connections (EC) vendors is to ensure that case managers from the Bridge Program and the EC vendors engage in on-going joint case planning and case collaboration. This integration of services ensures a long-term focus on self-sufficiency while being responsive to the need for immediate referral and access to treatment services.

Supporting Teens

Delaware is targeting youth by providing special services. Through the Department of Education, Delaware provides a family literacy program which includes parenting skills training and other services to teen parents and their children to prevent repeat pregnancies. Funds are allocated to Delaware's Teen Pregnancy Prevention Initiative to support activities for at-risk teens primarily in School Based Health Centers (SBHCs). In addition, wellness centers located in 27 high schools provide medical, health and counseling services to high school students.

The Division of Public Heath directs the abstinence education programming through Section 510, Title V Abstinence Education federal funding which is intended to promote the postponement of sexual involvement by teens by changing norms and teaching teens needed skills. The goals of abstinence education funding are to:

- Increase the number of adolescents who are making choices to remain sexually abstinent.
- Increase the number of adolescents who are informed of the social, psychological and health gains to be realized by abstaining from premarital sexual activity.
- Increase the number of adolescents who are making healthy lifestyle choices to postpone sexual activity by avoiding situations and risk behaviors that would make them more vulnerable to sexual advances and urges.

Delaware has undertaken, through the Alliance on Adolescent Pregnancy Prevention (AAPP), a grassroots community and media outreach campaign to convince teenagers to postpone sexual activity and to avoid becoming or making someone else pregnant. AAPP works directly with parents in this initiative to improve communication between parents and children around sexuality and pregnancy prevention. In addition, AAPP provides preventive education and distributes information on preventing teen pregnancy, utilizing a number of kinds of interventions. For example, two full-time community educators visit schools, community centers, churches, and camps and provide workshops/training to parents and children around sexuality and teen pregnancy prevention. AAPP also maintains a resource center for the community and lends or gives away brochures, videos, curriculum, posters, books, and other communications about teen pregnancy prevention and sexuality.

The Wise Guys initiative is an adolescent male responsibility program that uses an established Wise Guys curriculum over a ten-week period. The program, operating in some high school based health centers, promotes character development and prevention of adolescent pregnancy by teaching young males self-responsibility in several areas.

Delaware's teen pregnancy prevention campaign also uses billboards to convey the message, and statewide conferences to provide assistance implementing prevention activities.

Delaware's TANF program provides a positive incentive to teenagers to graduate high school by age 19 by awarding a one-time $50 bonus. Additionally, TANF requires teenage mothers currently on welfare to live with their parent(s) or a responsible adult, stay in school, immunize their children and participate in parenting education.

Services to teens are also discussed in the Section entitled: Efforts to Reduce Out-Of-Wedlock Births. (See Page 30)

Early Childhood Intervention

The Delaware Department of Education is the Lead Agency for the state funded Early Childhood Assistance Program (ECAP). ECAPs are designed on the Federal Head Start model. All programs follow Head Start Performance Standards as the foundation for developing their program's systems and services. ECAP services are comprehensive and include: developmentally appropriate early childhood education, health and nutritional services, parent involvement, family partnerships/services, transportation, services for children with special needs, and transition services.

There are ECAP programs located throughout the state, with multiple grantees in each county. Grantees include

Federal Head Start programs, school districts, community early care and education organizations, and a for-profit early care and education program. Services are typically provided following the local school calendars, with some programs operating through the summer. Most of the ECAPs provide full day or wrap-around services to enrolled children. These programs collaborate with CCDF funded subsidized child care or use their own CCDF funds to provide this service to children and their families.

Non-Citizen Households

Families that include legal documented aliens participate in Delaware's TANF program. While these qualified aliens do not receive federal funded assistance, Delaware supports these families in attaining self-sufficiency thus enabling the family to no longer require assistance. Delaware provides State funded medical assistance for these families as well as employment and training assistance. These interventions, in addition to supporting self-sufficiency, have additionally been found to reduce the likelihood of out of wedlock and teen pregnancies.

Low Income Households

Eligible families who owe Delaware State income taxes may claim the State Earned income credit. Eligible tax payers may be forgiven up to an amount that equals 20 percent of the federal EITC. The State credit, unlike the federal credit, is non-refundable meaning the credit can only be applied to State taxes due.

Services for Working Families in Financial Crisis

Because of the ongoing, pressures on the cost of housing, fuel, and food, many families face temporary crises that place them at risk of displacement from their homes and/or at risk of dissolution of their family units. These working families receive a wide range of one time and on going supports in an effort to maintain the family unit and avoid episodes of TANF assistance. Working families at or below 600% FPL are eligible for supportive services and financial assistance determined to reduce the likelihood of dissolution of the family unit or the need for TANF assistance.

Solely State Funded Programming

Delaware places select groups of TANF eligible families in solely state funded programs. Funding the services these families receive in this way allows the State to provide services that are individualized to the needs of these families and does not subject the family to limitations imposed by federal TANF funding. For example, families in which the parent is unable to work due to a disabling condition are placed in a solely state funded program. This allows the state waive the TANF time limit requirements and place the parent in employment and training activities which are determined based solely on the needs and abilities of the parent as opposed to federally mandated activities which may be inappropriate for the parent. Delaware will continue to explore the opportunities afforded through solely state funded programs and may move all or sub-populations of families with a work eligible adult into solely state funding programs.

TANF BENEFITS TO NEEDY FAMILIES

Computing the Benefit

Eligibility will be determined prospectively. After establishing eligibility, benefits will be computed prospectively. Income per time period will be converted to a monthly income figure by utilizing the following conversion factors:

- Weekly - 4.33
- Bi-weekly - 2.16
- Semi-monthly - 2.00

Example: Given a weekly income of $85, multiply by 4.33 to arrive at a monthly income of $368.05.

The benefit amount will be determined by using prospective budgeting and the best estimate of earned and unearned income for the assistance unit. The payment will not be changed until the next eligibility determination, unless the recipient reports a change that would result in an increase in the benefit or there is a significant change in circumstances as defined below.

A significant change is defined as any of the following:

- Change in household size.
- New source of employment.
- Loss of unsubsidized employment or a change in employment status from full time to part time which was beyond the recipient's control.
- An increase of forty (40) hours or more in unsubsidized employment per month.
- Receipt of a new source of unearned income.
- Increases or decreases in existing sources of unearned income totaling $50.00 or more per month.

The recipient needs to verify all changes in circumstances.

EXAMPLE:
An applicant applies in May. The applicant is employed. The applicant is working 20 hours per week and earns $7.25 per hour. The best estimate of wages is calculated by multiplying 20 hours times $7.25 ($145.00 per week), then multiplying the weekly figure by 4.33 to determine the monthly income of $627.85.

Delivery of Services Across State

Delivery of services will be consistent across the State.

Redeterminations

At least one redetermination is required every twelve (12) months. TANF emphasizes work and work related activity. Mandating face-to-face redeterminations might undermine that goal. Therefore, mail-in redeterminations with a telephone interview are used as an option to encourage recipients to continue participating in employment and training activities or to keep working.

When a redetermination is due, the recipient must complete a new DSS application form or a DSS renewal form. The redetermination could be completing a paper form or participating in an automated interactive interview. A redetermination is complete when all eligibility factors are examined and a decision regarding continuing eligibility is reached.

The assistance case will be closed if a recipient fails, without good cause, to complete the redetermination review. Likewise, the assistance case of a recipient who fails, without good cause, to provide requested information necessary to establish continued eligibility will be closed.

As part of the verification process for continuing eligibility, the person will provide verification that (s)he has carried out the elements of the individual Contract of Mutual Responsibility.

Benefit Delivery: Direct Payments and Vouchers

Currently, Delaware uses check issuance as the payment method for TANF. Delaware is exploring other options including direct deposit, debit cards, and electronic benefit transfer. Any or all of these methods will be utilized for the issuance of TANF benefits if they become fiscally and technically viable.

Delaware directly pays for center-based childcare authorized for TANF participants, when the center agrees to accept the Delaware childcare reimbursement rate. Some caretakers, however, receive vouchers to self-arrange and pay for their child care. Delaware will reimburse these caretakers, up to the rates published in the Child Care and Development Fund (CCDF) plan, for the cost of childcare provided by licensed and license-exempt childcare providers.

EFFORTS TO REDUCE OUT-OF-WEDLOCK BIRTHS

Jobs for Delaware Graduates

The Jobs for Delaware Graduates (JDG) program provide services to needy children attending middle schools in Delaware with the goal of reducing school dropout rates, keeping children in their homes and the community, and reducing out of wedlock/teen pregnancies. Delaware uses Federal TANF funds and/or State MOE funds to fund the program. The JDG program provides a nationally recognized curriculum. The curriculum supports short and long-term goal setting, academic achievement, acquisition of life skills, and work skill development.

Other Initiatives

Delaware believes that the number of out-of-wedlock births to teens must be reduced significantly to eliminate poverty and dependency. A study by Doble Research Associates commissioned by the Governor's Family Council, in June, 1998, concluded that Delaware's efforts to reduce teen pregnancy, including establishing more after-school programs, strongly enforcing child-support enforcement and the Sexual Predator Act, and making teen mothers ineligible for cash assistance, are solidly supported by public opinion. We are undertaking a number of statewide initiatives to reduce adolescent pregnancy. Many of these initiatives are coordinated through the activities of the Alliance for Adolescent Pregnancy Prevention (AAPP). Ventures include the provision of adolescent health services through school-based health centers and improving teen utilization of our family planning centers.

The AAPP is a statewide public and private partnership charged with the development and implementation of a comprehensive plan to prevent adolescent pregnancy in Delaware. The organizational structure of the Alliance includes a 12 member advisory board appointed by the Governor and a statewide membership of over 200 schools, agencies, organizations, churches, and individuals concerned with teen pregnancy. Staff and program support for the Alliance is provided through a contract from the Division of Public Health (DPH) to Christiana Care.

Since its inception, the AAPP has awarded mini-grants to non-profit youth organizations to provide community based teen pregnancy programs; implemented a statewide media campaign to increase community awareness; and worked with existing coalitions to establish teen pregnancy prevention programs. AAPP plans and activities include:

- Statewide leadership to develop a visible, viable structure for mobilizing resources needed to impact the problem.

- Data development to develop a methodology to monitor rates in real time.
- Public relations efforts to increase community awareness and involvement.
- Identifying barriers to teen utilization of family planning services and developing solutions.

The Division of Public Health has the lead responsibility in Delaware to implement initiatives to reduce teen pregnancy. Using the strategies and recommendations presented by AAPP, DPH activities include school based health centers, family planning clinics, parenting education, and the peer leadership program. The "teen friendly" services provided at Department of Public Health Units located at State Service Centers have resulted in a significant increase in use. In addition, all clients seen in Sexually Transmitted Disease Clinic sites receive counseling on family planning, as well as pregnancy prevention supplies.

Based on a report by Adolescent Health Survey Research (AHSR), which used a survey and focus groups with youth and their parents conducted early in 1999 to identify top strategies in pregnancy prevention, Delaware implemented a number of initiatives to prevent subsequent births, including:

- Smart Start, an enhanced prenatal program that attempts to decrease low birth weight babies, infant mortality, and maternal mortality, through social service, nutritional, and nursing support to at-risk pregnant women.
- Placing information on our combined Food Supplement/cash assistance/MA/Child Care applications for the following telephone numbers: Planned Parenthood, AAPP and Delaware Helpline, to obtain information on pregnancy prevention/family planning.

In addition, family planning and reproductive health services are provided to adults in eight public health locations in Delaware and similar services are provided to adults by Planned Parenthood of Delaware in five locations in the state. Minority populations are targeted through family planning and reproductive health services available at three Federally Qualified Health Centers in Delaware. In addition, family planning and reproductive health services are available to Delaware State University students through the DSU health center.

These Delaware initiatives to reduce out-of-wedlock births are complemented and strengthened by the policies of TANF which:

- Require adults and minor parent(s) to obtain family planning information from the provider of their choice.
- Provide for a fiscal sanction of an initial $50 reduction in benefits for failure, without good cause, to obtain family planning information. This reduction will increase each month by $50, either until there is compliance or the case is closed. The sanction will end when the adult and/or minor parent(s) obtains the family planning information at the provider of his or her choice.
- Eliminate benefit increases for children conceived while a caretaker is receiving TANF, and apply this family cap to children who are the firstborn of minors included in a TANF grant where the children are born after March 1, 1997.
- Treat two parent families the same as single parent families.

The goals for the Division of Public Health teen pregnancy prevention are mirrored in the 'Responsible Sexual Behavior' section of the Healthy Delaware 2010 guidebook. They include:

a. By 2010, increase the proportion of teens who abstain from sexual intercourse or use condoms if currently sexually active from 79% to 85%.
b. By 2004, implement an evidence-based media campaign to promote responsible sexual behavior.
c. By 2010, maintain the proportion of youth that report remaining abstinent before age 13 at 90%.
d. By 2005, reduce the birth rate for teenagers aged 15 through 17 from 39.2 to 33.3 per 1,000.

Goals a. and c. are measured through the Youth Risk Behavior Survey administered every two years by the Department of Education. Goal b. has been satisfied by the implementation of an ongoing teen pregnancy prevention media campaign managed by the Alliance for Adolescent Pregnancy Prevention through Christiana Health Care under contract by DPH. Goal d. is measured by the Delaware Health Statistics Center.

Families participate in educational activities that discuss the benefits of marriage and planning to have children when they can be best supported by both parents within the financial management component of employment and training. Our goal is to reduce the out of wedlock birth rate by 1% each year beginning with FFY 2004.

INITIATIVES TO PROMOTE TWO-PARENT FAMILIES

To provide broad-based support for working families, Delaware was one of the first states to recognize that the special eligibility requirements that applied to two-parent families contributed to both the non-formation and the break-up of two-parent households. The six-quarter work history requirement was particularly responsible for non-marriage of teen parents, who had not yet worked enough to meet this qualification. The denial of benefits to two-parent families if one of the parents was working at least 100 hours a month also contributed to the low work rate of two-parent families that were receiving AFDC.

When Delaware eliminated these special deprivation requirements as part of our welfare reform waiver, the numbers of two-parent families receiving TANF soared, and we believe that, without the TANF change, many of these households would have applied for and been found eligible for benefits as single mother families. These never formed two-parent households would have had profound effects on the ability of the family to exit welfare and on the future success of the

children. We have found that the average length of stay on TANF is much lower for two-parent families, reflecting the greater incidence of retained employment when two adults are able to engage in work and share child care duties.

Delaware has always allowed taxpayers to file separately and applied the progressive rate structure to each spouse's income separately, which avoided most tax increases resulting from marriage. However, a marriage penalty could still result from uneven standard deduction amounts. By increasing the standard deduction amount for married taxpayers to exactly twice the single standard deduction beginning January 1, 2000, enactment of HB 411 has effectively eliminated the income tax "marriage penalty" in the State of Delaware.

ADDRESSING PROBLEMS OF STATUTORY RAPE AND DOMESTIC VIOLENCE

Statutory Rape

The Sexual Predator Act of 1996 imposes more severe criminal sanctions on adult males who are significantly older than their victims and holds them financially accountable when children are born as a result of violations of this law. Each year an administrative notice regarding the act, ways in which DSS staff can identify appropriate referrals to the Division of Family Services is published

The legislation requires a cooperative agreement as part of a multi-faceted effort to combat teenage pregnancy and reform welfare. Specifically, the law requires the Attorney General's Office, the Department of Health and Social Services, the Department of Services to Children Youth and Their Families, the Department of Public Instruction and law enforcement agencies statewide to establish a cooperative agreement specifying the various roles of the agencies involved. As a result of this legislation the Department of Health and Social Services and the Department of Public Instruction conducts programs designed to reach state and local law enforcement officials, the educational system, and relevant counseling services on the problem of statutory rape.

A new initiative is a partnership with the Delaware Fatherhood and Family Coalition (DFFC). DSS is negotiating with the DFFC to develop programming that will address statutory rape through community presentations and the distribution of literature. The program will provide- education and training on the problem of statutory rape so that teenage pregnancy prevention programs may be expanded in scope to include men.

Victims of Domestic Violence

As required under the optional Certification of Standards and Procedures to Ensure that a State will screen for and identify domestic violence, DSS will refer identified victims of domestic violence to appropriate services such as shelters and counseling and to Family Court. Under the Protection from Abuse Act (PFA), 10 Delaware Code, Chapter 9, Sections 1041-1048 (Attachment D), Family Court has the power and authority to expeditiously adjudicate all matters related to domestic violence including court ordered restraints, custody, property and financial resources.

Through this strong domestic violence law, Delaware is clearly committed to assisting victims of domestic violence to overcome circumstances which put them in physical, emotional and/or financial jeopardy, and to assist them in seeking redress and a safe environment for themselves and their families. The law is a strong deterrent to domestic violence, according to a study by the National Center for State Courts, released on December 2, 1996. The study reported that 86 percent of those who sought protection under the law, which permits individuals in danger of serious physical abuse to obtain a protection order, were no longer being physically abused.

As a part of barrier screening process, DSS caseworkers and Bridge case management staff use standardized instruments to identify victims of domestic violence. Every worker is trained on administering the standardized instrument. As part of this training, staff learns how to recognize and assist women who are victims of domestic violence. The Division of Social Services (DSS) also has trained domestic violence resource workers at every DSS site. The DV Resource worker supports the local office by assisting clients and staff in accessing domestic violence services, applying the domestic violence waiver to the TANF case, and promoting understanding and awareness of the challenges faced by clients. The DV resource worker receives training on domestic violence through an intensive two-day training called Domestic Violence 101. The DV resource workers also meet as a group at regularly scheduled meetings to learn about community resources and to discuss issues in accessing community supports. Community Domestic Violence agencies also attend these meetings to foster networking between DSS and the treatment community. Additional resources and workshops are also provided for the DV resource worker to ensure they have the most relevant and up to date information.

We believe that our methodology of resolving domestic violence situations as quickly as possible, as provided for under a strong statute, is the most appropriate and best course of action to assist current victims and to prevent future violence where possible.

Delaware certifies that the Family Development Profile establishes a procedure that screens for domestic violence and that, pursuant to a determination of good cause, program requirements may be waived if it is determined that compliance would make it more difficult for individuals to escape violence. However, decisions to waive compliance with TANF requirements will be made on an individual, case-by-case basis, and will not endorse an individual's failure to behave proactively to ameliorate destructive domestic violence situations.

Addressing Child Poverty

Delaware's summit on Poverty and Economics, held on April 22, 2009, had approximately 500 participants including

state and local policymakers, advocates, and members of the provider. The summit was a vehicle for release and consideration of the findings and initial recommendations of the Delaware Child Poverty Task Force whose goal is to reduce child poverty in Delaware by 50 percent by 2019.The state will develop an action plan around the priority recommendations that sets goals, builds stakeholders, and defines outcomes with key indicators and benchmarks. The Task Force has also been charged with coordinating and expanding local efforts to address poverty and developing a legislative agenda to meet the state's poverty reduction goal. (See Appendix C)

ADMINISTRATION

Structure of Agency

The Department of Health and Social Services is the cabinet level agency designated by the State as responsible for Delaware's public assistance programs as allowed under Title IV-A of the Social Security Act. Within the Department, the Division of Social Services (DSS) administers these programs. (DSS organizational chart included as Attachment E to State Plan.)

Staff Training

TANF training has been incorporated into the Cash Grant training which is required for all new financial services staff. Case Management training has now been incorporated into interviewing and coaching training, which is required for all new staff. Veteran staff attend trainings, open labs, and staff meetings, which re-enforce case management, interviewing, and TANF application processing.

Administrative Spending

Delaware will comply with federal requirements.

Compliance With Participation Rates

Delaware intends to meet the participation rate requirements set forth in the TANF legislation. Recognizing that Delaware's hourly requirements for participation in work and work-related activities are broader than those prescribed by the current TANF legislation, we are prepared to provide some benefits utilizing solely state funding (SSF) if it becomes necessary in order to continue to meet TANF work participation requirements.

Maintenance of Effort

Delaware is aware of and intends to fully comply with the requirements of the law (P.L. 104-193) to maintain a prescribed level of historic state expenditures. Delaware will ensure that expenditures of state funds for benefits and services ("Qualified State Expenditures" as defined in the law) for TANF participants (either in the Part A federally funded program or non-Part A state funded program) who are TANF eligible will equal or exceed the required annual spending level.

As a 1975 fill-the-gap state, Delaware has opted to continue to use fill-the-gap for the issuance of child support disregards and child support supplemental payments to TANF clients. Delaware considers these payments to be "cash assistance" to eligible families and therefore to be within the definition of "Qualified State Expenditures".

Financial eligibility criteria for MOE-funded and solely state funded assistance or services are the same as for other TANF assistance or services, except that MOE claimed for child care under the provisions of 45 CFR Ch. II § 263.3 will follow the financial eligibility criteria established in the CCDF State Plan and associated State regulations.

Nondiscrimination Statement

State of Delaware agencies administering the TANF Block Grant assure equal opportunity and nondiscrimination in their employment practices and service delivery. No person shall on the basis of sex, age, color, national origin, race, or disability status be excluded from participation in, be denied benefits of or be subjected to unlawful discrimination under any program or activity receiving or benefiting from federal financial assistance and administered by the agencies.

Further, it is the obligation of the agencies to make reasonable accommodations for an applicant or participant so that no limitation—physical, mental or language—prevents his or her complete participation.

Protection of Privacy of Assisted Families

31 **Delaware Code**, Chapter 11, Section 1101 provides that public assistance information and records may be used only for purposes directly connected with the administration of public assistance programs. Thus, all information gathered regarding individuals for public assistance purposes is considered confidential and will be safeguarded by DSS. By safeguarding public assistance information, DSS protects its clients from being identified as a special group based on financial needs and protects their right to privacy.

General information regarding expenditures, numbers of clients served, and other statistical information is a matter of public record and may be made available to any interested party. Other than, the exceptions noted below, DSS will not release any information regarding a particular individual without the individual's written consent.

- DSS Regional Operations Managers have the authority to disclose the address of a recipient to a Federal, State or local law enforcement officer at the officer's request if the officer furnishes the agency with the name of the recipient and notifies the agency that the recipient:
    1. Is fleeing to avoid prosecution; or
    2. Is a fleeing felon (or in the case of New Jersey is fleeing from conviction of a high misdemeanor); or
    3. Is violating a condition of probation or parole; or
    4. Has information that is necessary for the officer to conduct his or her official duties; and
    5. The location or apprehension of the recipient is within such official duties.
- If a law enforcement officer requests information that does not meet the guidelines indicated above, a subpoena from a court of law is required before the information can be released.
- DSS is required to report to the Division of Family Services in situations where it believes a home is unsuitable because of neglect, dependency, abuse or exploitation of a child.
    1. A Court Appointed Special Advocate (CASA) is given permission to inspect and/or copy any records relating to the child and his or her family guardian without their consent. The CASA has the authority to interview all parties having significant information relating to the child.
        - If information is released under the procedures applying to CASA, pertinent details of the reasons for the release must be documented and written notification of this release must be sent to the last known address of the individual to whom the record refers.
- DSS has the authority to disclose information concerning applicants and recipients provided it pertains to:
    1. An investigation, prosecution, or criminal or civil proceeding conducted in connection with public assistance programs.
    2. The administration of any other federal or federally assisted program that provides assistance, in cash or in kind, or services, directly to individuals on the basis of need. The agency must assure DSS that such information will remain confidential and will be used only to pursue services for the individual. Other means tested programs include the Supplemental Security Income Program, School Lunch and Breakfast Program, the Energy Assistance Program, and the Low Income Housing Program.
    3. Other agencies (such as Children and Families First, Inc., Catholic Social Services, Legal Aid, etc.) must provide written permission from the recipient before public assistance information may be released.
    4. Other governmental agencies may obtain lists of recipients from DSS if the information will be used to perform services for DSS, and the agency can assure DSS that the lists will remain confidential.

Appeals Process

DSS will provide timely and adequate notice for actions taken which affect eligibility or benefit level. Adequate notice means a written notice that includes a statement of what action the agency intends to take, the reasons for the intended agency action, the specific regulations supporting such action, explanation of the individual's right to request a fair hearing, and the circumstances under which assistance may be continued if a hearing is requested.

Timely notice means a notice that is mailed no later than 10 days before the date of action (i.e., 10 days before the intended change would be effective). When DSS learns of facts indicating that assistance should be discontinued, suspended, terminated, or reduced because of the probable fraud of the recipient, and, where possible, such facts have been verified through secondary sources, notice of a grant adjustment is timely if mailed at least five days before the action would become effective.

An opportunity for a hearing will be granted to any applicant who requests a hearing because his/her claim for assistance is denied or is not acted upon with reasonable promptness and to any applicant or recipient who is aggrieved by any Agency action.

To be considered by the Agency, a request for a hearing must be a clear expression in writing by the appellant or his/her representative to the effect that (s)he wants the opportunity to present his/her case to higher authority. The freedom to make such a request will not be limited or interfered with in any way and the Division will assist the appellant in submitting and processing his/her request. A hearing need not be granted when either State or Federal law requires automatic grant adjustments for classes of recipients, unless the reason for an individual appeal is incorrect grant computation.

Certifications in Support of Delaware's State Plan for Temporary Assistance for Needy Families

The State of Delaware will operate a program to provide Temporary Assistance for Needy Families (TANF) program so that children may be cared for in their own homes or in the homes of relatives; to end dependence of needy parents on government benefits by promoting job preparation, work, and marriage; to prevent and reduce the incidence of out-of-wedlock pregnancies and establish annual numerical goals for preventing and reducing the incidence of these pregnancies; and to encourage the formation and maintenance of two-parent families.

This program is known as Temporary Assistance for Needy Families (TANF).

The Executive Officer of the State is Jack Markell, Governor.

In administering and operating a program that provides Temporary Assistance for Needy Families with minor children under title IV-A of the Social Security Act,

1 a. I certify that the Delaware Department of Health and Social Services is the agency responsible for administering the program, and the Delaware Division of Social Services is the agency responsible for supervising the program;

1 b. I assure that local governments and private sector organizations:

(I) have been consulted regarding the plan and design of welfare services in Delaware so that services are provided in a manner appropriate to local populations; and

(II) have had at least 45 days to submit comments on the plan and the design of such services.

2. Delaware will operate a Child Support Enforcement program under the State plan approved under part D.
3. Delaware will operate a Foster Care and Adoption Assistance program in accordance with part E, and takes all necessary actions to ensure that children receiving assistance are eligible for medical assistance under the State plan under title XIX.
4. Delaware will provide each member of an Indian tribe, who is domiciled in the State and is not eligible for assistance under a Tribal Family Assistance plan approved under Section 412, with equitable access to assistance under the State program funded under this part attributable to funds provided by the Federal Government.
5. Delaware has established and is enforcing standards and procedures to ensure against program fraud and abuse, including standards and procedures concerning nepotism, conflicts of interest among individuals responsible for the administration and supervision of the State program, kickbacks, and the use of political patronage.

OPTIONAL CERTIFICATION:

[x] I also certify that Delaware has established and is enforcing standards and procedures to:

(1) Screen and identify individuals receiving assistance under this part with a history of domestic violence while maintaining the confidentiality of such individuals;

(2) Refer such individuals to counseling and supportive services; and

(3) Waive, pursuant to a determination of good cause, other program requirements such as time limits (for as long as necessary) for individuals receiving assistance, residency requirements, child support cooperation requirements, and family cap provisions, in cases where compliance with such requirements would make it more difficult for individuals receiving assistance under this part to escape domestic violence or would unfairly penalize such individuals who are or have been victimized by such violence, or individuals who are at risk of further domestic violence.

Certified by the Chief Executive Officer of the State

____ _____

Date Jack Markell, Governor

APPENDIX A

Emergency Assistance

Delaware will continue to provide services to families as approved under Parts A and F of Title IV of the Social Security Act as in effect on August 21, 1996. Delaware defined a comprehensive services program under the AFDC-EA service component and intends to continue to fund these services. Federal TANF funds will be used under this provision. The approved plan that was in effect on August 21, 1996, is included on the following eight (8) pages for reference.

State MOE funds may also be used to provide family preservation and non-IV-E foster care benefits or services to relatives and to non-relatives when required to address a child's needs during a period of temporary absence from the TANF eligible family. For MOE-funded services and benefits, the period of temporary absence is defined as 12 months as long as the child is expected to return home within that 12-month period. Under special circumstances that must be documented in the case file or to ensure the safety of the child, a good cause extension of the family reunification plan may be granted for up to an additional 180 days. The types of benefits that may be provided to the child during the period of temporary absence include food, clothing and shelter in a group or foster care setting. Services include information and referral, investigation, assessment, case management, family and individual counseling and therapy, health and mental health treatment, legal, and protective services.

CITATIONS

SECTION 3 EMERGENCY ASSISTANCE TO NEEDY FAMILIES WITH CHILDREN

233.120
406(e)

A. Emergency assistance to needy families with children under the Age of 21 is provided in accordance with 45 CFR 233.120.

___ No. (Paragraphs B to D. of this Section do not apply)

_X_ Yes, as specified below, coverage is limited to:

1. Must be a family with a child under age nineteen (19).

2. Families with children in receipt of or eligible for Medicaid for emergency A.1. and Assistance B. in Attachment 3-A.

3. Families with:

Children at risk of removal or removed from their home due to, or suspected at risk of, abuse or neglect, or

Children removed from, or at risk of removal from, the community for Emergency A.2. and Services C in Attachment 3-A.

B. Families of migrant workers are covered.

_X_ No.

____ Yes, on a statewide basis.

____ Yes, but only in the following areas in the State.

C. Other eligibility requirements are in effect.

____ No.

_X_ Yes, as specified below:

1. An application must be filed, signed and dated by a parent, another member of the family when the parents are unable or unwilling to apply, or a state agency acting on behalf of the child.

2. The child must be living with a specified relative, or was living with a specified relative, within six (6) months prior to the month in which assistance is requested. The child must be, or have been, living in a place of residence maintained by one or more specified relatives as his or their own home.

3. The child is without resources immediately accessible to meet his/her needs.

4. The emergency assistance is necessary to avoid destitution or removal of such child or to provide living arrangements for him in a home.

5. The destitution or need for living arrangements did not arise because the needy child or specified relative refused, without good cause, to accept employment or training for employment.

D The kinds of emergency situations which are covered by this program and the kinds of assistance and services provided to meet the emergency situations are detailed in Attachment 3-A.

GROUPS COVERED AND ELIGIBILITY REQUIREMENTS AND CONDITIONS — CITATIONS 233.10 and 233.90

Eligibility Conditions related to Federal Requirements

1. Deprivation of parental support or care

Following are State agency's definition of

a. Continued absences: [45 CFR 233.90 9(c)(1) (i) and (iii)]

Continued absence of a parent from the home constitutes the reason for deprivation of parental support or care when the parent is out of the home, the nature of the absence is such as either to interrupt or terminate the parents functioning as a provider of maintenance, physical care, or guidance for the child and the known or indefinite duration of the absence precludes counting on the parent's performance of his function in planning for the present support or care of the child. If these conditions exist the parent may be absent for any reason and may have left only recently or some time previously. A parent who is a convicted offender but is permitted to live at home while serving a court-imposed sentence by performing unpaid public work or unpaid community service during the workday is considered absent from the home.

b. Incapacity; [45 CFR 233.90 (c) (I) (i) and (iv)]

The physical or mental incapacity of a parent will be held to exist when one parent has a physical or mental defect, illness, or impairment. The incapacity will be supported by competent medical testimony and must be of such a debilitating nature as to reduce substantially or eliminate the parent's ability to support or care for the otherwise eligible child and be expected to last for a period of at least 30 days.

In making the determination of incapacity, the Division will rely upon Form PA-16 or other complete medical documentation. In making the determination of ability to support, the Division will take into account the limited employment opportunities of handicapped individuals. (e.g., person accepted for service by the Division of Vocational Rehabilitation.)

A finding of eligibility for OASDI or SSI benefits, based on disability or blindness is acceptable proof of incapacity of AFDC purposes.

c. Assistance is continued for a temporary period while the effects of these eligibility conditions are being overcome [45 CFR 233.10 (b) (4)].

Continued Absence
[ ] No [X] Yes, under the circumstances and for the time periods specified below:

Upon release from incarceration, for a period not to exceed 120 days, the child may remain eligible on the factor of deprivation of parental support or care unless the parent returns to employment or another factor of deprivation can be established.

Incapacity
[ ] No [X] Yes, under the circumstances and for the time periods specified below:

For a period not to exceed 120 days after the parent no longer has an incapacitating condition, the child may remain eligible on the factor of deprivation of parental support or care, unless the parent returns to employment or assumes the usual child care and housekeeping responsibilities.

Unemployment
[ ] No [X] Yes, under the circumstances and for the time periods specified below:

For a period not to exceed 120 days after release from involuntary confinement.

For a period of four (4) months if the parent is employed more than one hundred (100) hours per month but otherwise eligible.

2. Living with specified relative in a place of residence maintained by one or more such relatives as his or their own home. [45 CFR 233.90 (c) (1) (v)].

(continued)

Following is a list of the relatives with whom a child may be living, in conformity with Sec. 406 (a) (I) of the Social Security Act and 45 CFR 233.90 (c) (I) (v) (A):

Any relation by blood, marriage, or adoption who is within the fifth degree of kinship to the dependent child. The appropriate caretaker relative must therefore be a parent (1st degree), grandparent (2nd degree), sibling (2nd degree), great-grandparent (3rd degree), uncle or aunt (3rd degree), nephew or niece (3rd degree), great-great grandparent (4th degree), great-great-great grandparent (5th degree), great-great uncle or aunt (5th degree), or a first Cousin once removed (5th degree). The spouse of any person named in the above groups even if the marriage is terminated by death or divorce is considered a specified relative

3. The relative exercises "day to day care" of the child when the following criteria established by the State are met:

   The relative makes decisions regarding the child's education, medical care, and religious upbringing. Additionally, the relative provides physical care of the child on an every day basis.

4.a. The relative exercises "care and control" of the child when the following criteria established by the state are met:

   The relative case of care and control defines the child wit the following:

   The relative:

   - makes decisions regarding the child's education.
   - makes decisions regarding the child's medical care.
   - makes decisions regarding the child's religious upbringing.

b. The definition of "temporarily absent is:

   A child who is temporarily absent from the home to receive medical care, or allege school absentee because of special education needs, such as enrollment in Job Corps or Starck School for the Deaf, or is absent for some other reason as long as the absence is no longer than 120 days, may receive assistance if the following conditions exist:

   - The caretaker with whom the child is living continues to have responsibilities for the child's care.
   - The caretaker continues to maintain a home for the child, and
   - The caretaker plans for the child to return home at the end of the absence.

Note: A child who is absent from the home as a result of a court action is not considered temporarily absent. In such cases, the assistance for the child is terminated.

EMERGENCY ASSISTANCE TO NEEDY FAMILIES WITH CHILDREN CITATIONS 233.120

A. Kinds of emergencies covered.

1. Emergencies as the result of a circumstance or combination of circumstances which require immediate action in order to avoid the destitution of a child.

2. Situations in which a child has been removed from his/her home into publicly-funded care or supervision, or the risk of such removal, as determined by the Department of Services for Children, Youth and Their Families, or its designee.

B Kinds of assistance provided to meet emergency situations.
1. Rent/Mortgage (includes securing housing)
2. Food for Special Medical/Diet needs
3. Necessary clothing
4. Appliances/Furniture
5. Fuel/Utilities during any period in which coverage is not available under either Title XX or the Low Income Home Energy Assistance Program (LIHEAP)
6. Home Repairs
7. Medical Expenses
8. Transportation
9. Temporary Emergency Shelter payments

C. Kinds of services provided to meet the emergency situations, as determined appropriate and necessary by the responsible state agency officials, or their designee.
1. Information and Referral
2. Case Management, Counseling, Therapy, and Assessment
3. Securing family or child shelter
4. Child care
5. Temporary substitute Care payments for children not covered under Title IV-E
6. Health Related Services not paid for by third parties
7. Mental Health Services not paid for by third parties
8. Protective Services for children such as Homemaker and Foster Grandparent services
9. Legal Services

10. Parenting Education and Training
11. Support Services to normalize family functioning such as Homemaker Services

Limitations on Assistance

1. Assistance for Emergency A.1. and Assistance B, is authorized during one period of Thirty (30) consecutive days in any twelve (12) consecutive months. The payments may be used to meet current needs or prior needs (under B 1-8), which occurred before the 30-day period.

   Temporary Emergency shelter payments (B 9) may extend up to 60 days after the end of the 30-day period, for a total of 90 days.

2. Assistance for Emergency A.2., and Services C., are authorized during one period of Thirty (30) consecutive days in any twelve (12) consecutive months, for a period up to twelve (12) months or until the emergency situation is concluded, whichever is earlier.

3. Assistance for Emergency A.2. and Services C., are provided to the extent that they are determined necessary and appropriate by the responsible IV-A state agency.

4. Emergency Services C. costs provided by the agency staff will be determined by its Approved Cost Allocation Plan.

Assistance for Emergency A.2. and Service C., is provided prior to complete determination of eligibility when facts support a presumption of eligibility, and the state IV-A agency has methods for assuring that federal sharing is claimed only after a final determination that eligibility exists for the period for which such assistance was authorized.

The Department of Services for Children, Youth and Their Family will take the application, assess the need, and verify eligibility factors. In all cases, the Department of Health and Social Services (IV-A state agency) will determine eligibility and authorize reimbursement.

APPENDIX B

Division of Social Services

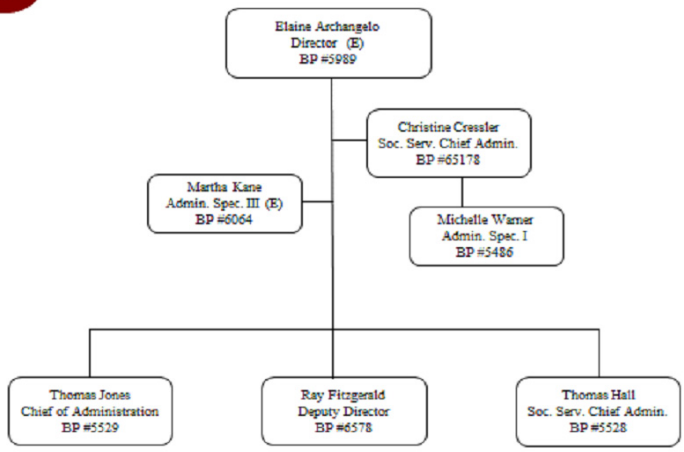

9/11/2014

Division of Social Services

Vacant
Seasonal Supv. Prof. SW
BP #96816

Operations

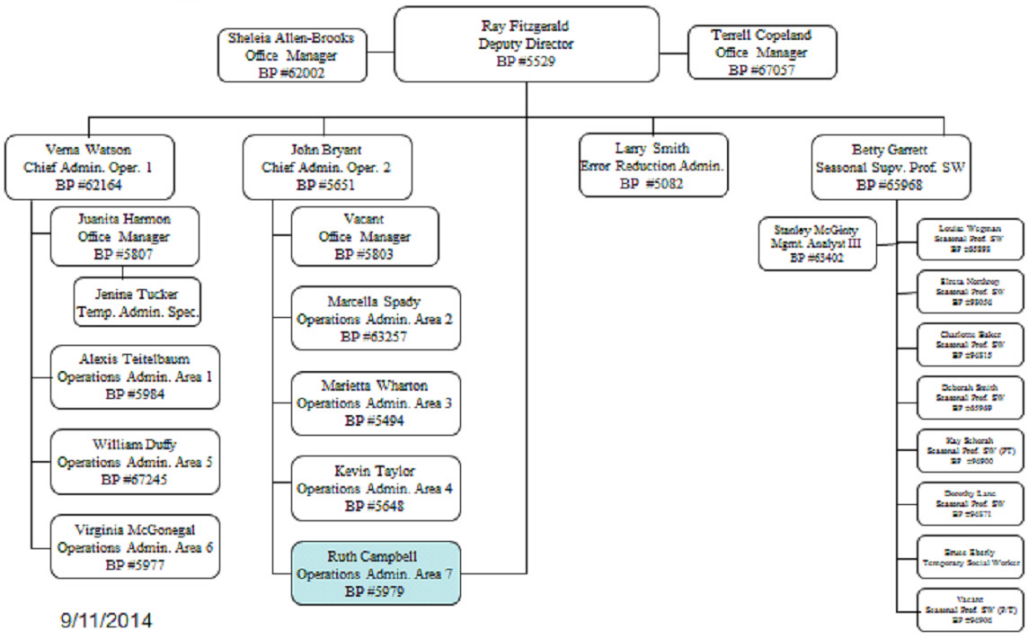

9/11/2014

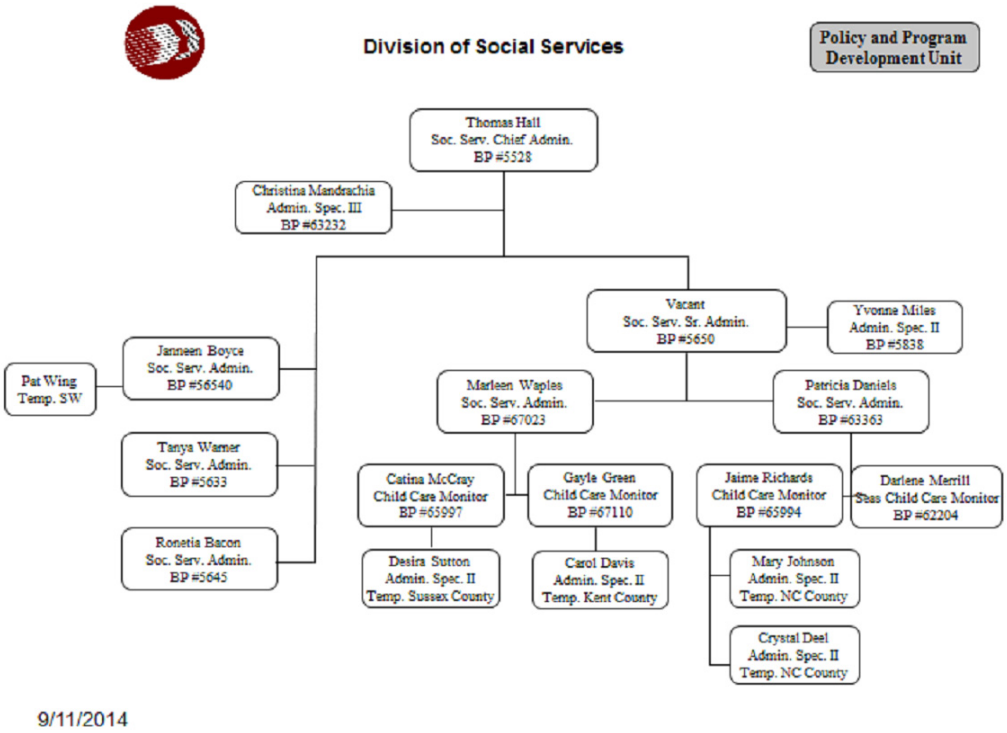

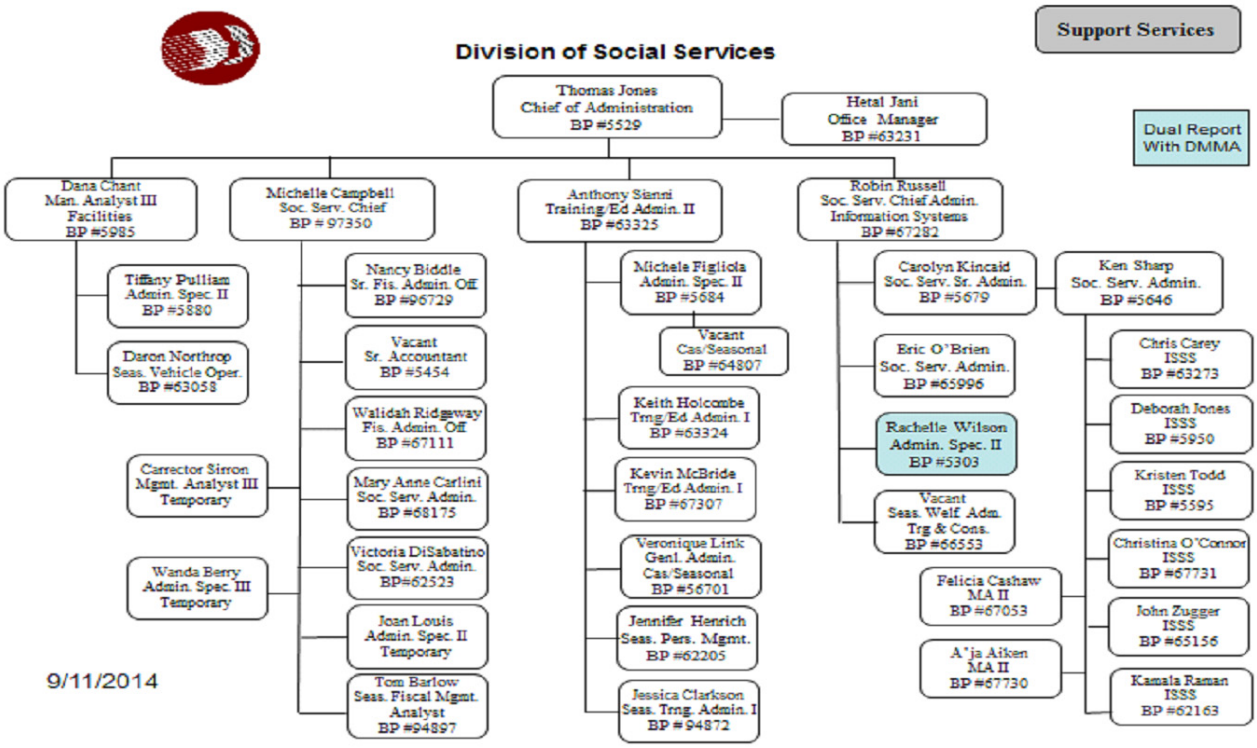

APPENDIX C

Executive Order Number One Hundred-One Establishing The Child Poverty Task Force

WHEREAS, the United States of America has the highest child poverty rate of the seventeen wealthiest countries in the

world; and

WHEREAS, although the State of Delaware made progress towards reducing child poverty in the 1990's, the poverty rate in Delaware has risen since 2002; and

WHEREAS, children who live in poverty are subjected to a number of harsh realities that include, but are not limited to, a substantially greater likelihood to die from infectious diseases and to drop out of school prior to obtaining a high school diploma; and

WHEREAS, the United Kingdom reduced the child poverty rate in Great Britain from 19% in 2000 to 11% in 2006 through its commitment to reduce child poverty by 50% within ten years; and

WHEREAS, the States of Connecticut, California, and Minnesota, as well as the cities of New York and Milwaukee, have made similar commitments to reduce the child poverty rate by 50% within ten years; and

WHEREAS, the State of Delaware recognizes the moral and economic interest in reducing child poverty, and appreciates the productivity that would result from a substantial decrease of child poverty in Delaware.

NOW, THEREFORE, I, RUTH ANN MINNER, by virtue of the authority vested in me as Governor of the State of Delaware, do hereby declare and order as follows:

1. The Child Poverty Task Force (the "Task Force") is hereby established.

2. The Task Force shall consist of twenty-five (25) members as follows:

a. The Secretary of the Department of Education or his/her designee;

b. The Secretary of the Department of Health and Social Services or his/her designee;

c. The Secretary of Labor or his/her designee;

d. The Secretary of the Department of Services for Children, Youth and Their Families or his/her designee;

e. The Executive Director of the Delaware State Housing Authority or his/her designee;

f. The Chief Judge of the Delaware Family Court or his/her designee;

g. The four Co-Chairs of the "Kid's Caucus" in the State Legislature;

h. The Child Advocate or his/her designee;

i. The Governor's Policy Advisor for Health;

j. The Governor's Policy Advisor for Education;

k. Three members of the Delaware non-profit community whose organizations serve children and families, to be appointed by the Governor;

l. A representative of the University of Delaware's Center for Community Research and Service;

m. A KIDS COUNT Delaware Board member or Data Committee Member or his/her designee;

n. A member of the business community appointed by the State Chamber of Commerce;

o. The President of the Metropolitan Wilmington Urban League or his/her designee;

p. A representative from the City of Wilmington, designated by the Mayor of the City of Wilmington;

q. One at-large member appointed by the President *Pro Tempore* of the Delaware Senate; and

r. One at-large member appointed by the Speaker of the Delaware House of Representatives.

3. The Task Force shall develop a ten-year plan to reduce the number of Delaware children living in poverty by 50% and to establish recommendations for prevention and intervention services in order to promote the health, safety and well-being of Delaware's children and their families. The plan shall include:

a. Identifying and analyzing the occurrence of child poverty in Delaware; and

b. Identifying the risk factors for and underlying etiologies of child poverty; and

c. Reviewing scholarly research that identifies the best practices for prevention and intervention of child poverty; and

d. Analyzing the long-term effects of child poverty on children, their families and their communities; and

e. Assessing the costs of child poverty to municipalities and to the State; and

f. Creating an inventory of existing state-wide public and private programs that address child poverty; and

g. Calculating the percentage of the target population served by such programs and the current funding levels, if any, for such programs; and

h. Identifying and analyzing any deficiencies or inefficiencies of such programs; and

i. Establishing the procedures and priorities for implementing strategies to achieve a 50% reduction in child poverty in the State of Delaware by June 30, 2017.

4. The chairperson of the Task Force, who shall be appointed by the Governor from among its members, shall lead the administration of the Task Force by:

a. setting a time, date and place for the initial organizational meeting;

b. ensuring the proper preparation and distribution of meeting notices, agendas, minutes, correspondence, and reports of the Task Force;

c. ensuring the Task Force identify any staffing requirements necessary to properly execute the functions of this order, and allow the representatives from among the various state agencies to distribute those responsibilities within those agencies; and

d. ensuring the final report of the Task Force is submitted to the Governor with copies submitted to the Speaker of the House of Representatives, the President *Pro Tempore* of the Senate, the Director of the Division of Research of

Legislative Council and the Delaware Public Archives;

5. The Task Force shall submit its report on “Recommendations to Reduce Child Poverty” to the Governor, Speaker of the House and President *Pro Tempore* within one year of the effective date of this order.

Approved August 29, 2007

18 DE Reg. 646 (02/01/15) (Final)